smiths connectors

MICRO-D TWINAX
CONNECTORS

HYPERTAC INTERCONNECT DEVICES SABRITEC

TECHNICAL CHARACTERISTICS

SPECIFICATIONS

Temperature Rating: -55°C to + 125°C
Corrosion: MIL-STD-202 Method 101, Test Condition B
Shock: MIL-STD-202 Method 213, Test Condition B
Vibration: MIL-STD-202 Method 204, Test Condition B
Thermal Shock: MIL-STD-202 Method 107, Test Condition B
Durability: 500 Mate/Unmate cycles/min.
Dielectric Withstand Voltage: 250 VDC
Insulation Resistance: 5.000 MegaOhms min
Contact Current Rating: 3.0 Amps D.C. max.
Bandwidth: Up to 3 Gigahertz
Data Rates: Contacts designed to exceed 6 Gbps assembly dependent upon type and length of cable used
Differential Pair Cable Impedance: 100 Ohm ± 10 Ohm
Signal to Shield Cable Impedance: 5 Ohm + 7 Ohm

MATERIALS AND FINISHES

Shells & Inner Contacts: Brass per ASTM-B16, alloy UNS C3600 or BeCU per ASTM-B196, alloy UNS C17200, C17300 or leaded nickel copper, alloy UNS C19500, C19600 Gold plate per MIL-DTL-45204 Type II, Class 1
Insulators: PTFE per ASTM-D1710 or ULTERM 1000
Connector Plug/ Receptacle Shells Aluminum per ASTM-B211/221, 6061-T6 Electroless nickel plate per SAE AMS-C-26074 or Cadmium plate per SAE AMS QQ-P-416

MICRO-D TWINAX

- **Fibre Channel**
- **Ethernet: 10 Base-T, 100 Base-T, 1000 Base-T**
- **Firewire: IEEE 1394a and 1394b**
- **USB, DVII, HDMI and Infiniband**

Smiths Connectors offers a complete line of differential Twinax and Quadrax connectors, contacts and cable assemblies for high speed Ethernet, Firewire, and Fibre Channel applications. Differential pair quadrax and twinax connectors and cable assemblies offer superior performance in high speed matched impedance data-on-demand applications. The signal to signal and signal to shield characteristic impedance is maintained throughout the connector pair. A true twinaxial connector interface ensures signal integrity while minimizing jitter and data rate errors.

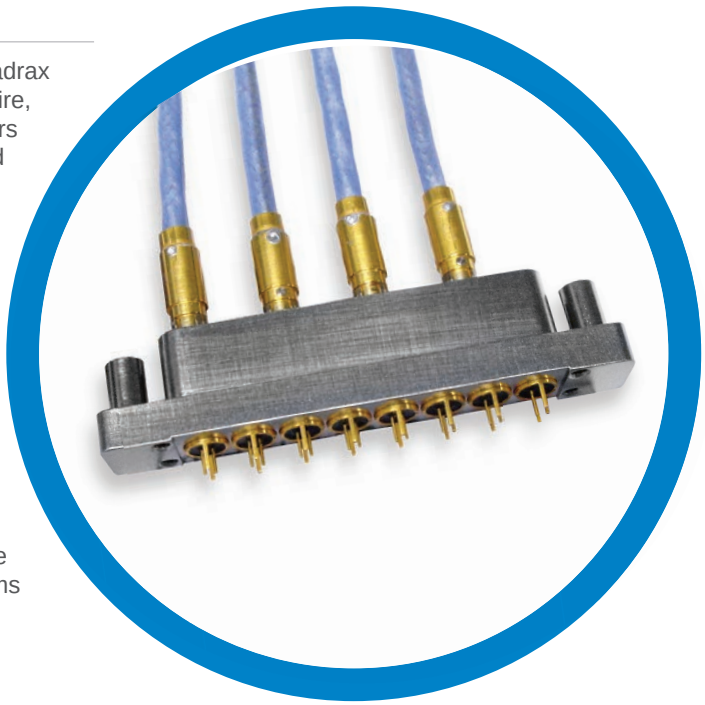

Testing Capabilities
Smiths Connectors Quadrax and Twinax interconnects are characterized for testing eye pattern, jitter, skew, and insertion loss on differential pair 100 ohm high speed Gigabit Ethernet applications with a wide variety of testing protocols. We utilize the Agilent E5071C 4 port network analyzer to measure the differential pair TDR impedance between Twinax connectors, cable assemblies, and quad cable Ethernet and Fibre Channel interconnect systems ensuring the most accurate acquired signal for high speed communications testing. The E5071C 4 port network analyzer is capable of highly accurate 100 Ohm differential measurements up to 20 GHz and can measure Eye Diagrams up to 16 Gbps.

Smiths Connectors' Micro-D Twinax Connectors (MDTX) offer twinax blindmate assemblies fitted into a low-profile metalized Micro-D style shell. This series allows for modularity of PCB routing of high speed signaling capable of 100 Ohm differential pair matched impedance for IEEE 1394b firewire and gigabit Ethernet applications in a size 10 twinax contact. These connectors allow for maximum space utilization, ultra miniature size, high vibration capability and are extremely light weight and modular with true signal integrity. Insert arrangements are available in 2, 4, 6 and 8 way twinax assemblies with mixed signal and power contacts available in hybrid layouts. These connectors are available with locking post mechanisms or blind mate features.

Please consult factory for unique hybrid layouts and custom shell configurations.

SIZE 10 TWINAX SOCKET CONTACT 100 OHM FOR MDTX CABLE MOUNT PLUG

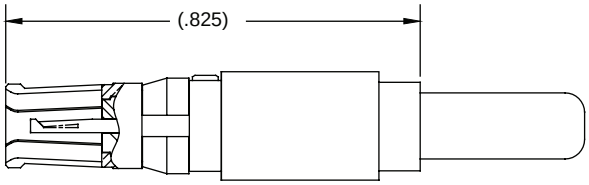

PART NUMBER	CABLE TYPE	CABLE
018934-0002	Differential Twinax	540-1153-000
018934-0003	Flexible Twinax	540-1161-000
018934-0004	Differential Twinax	540-1167-000

SIZE 10 TWINAX PIN CONTACT 100 OHM FOR MDTX CABLE MOUNT RECEPTACLE

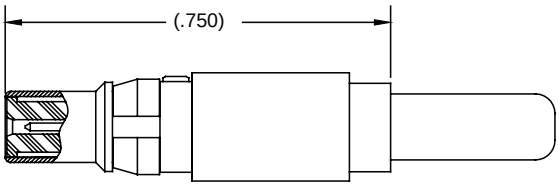

PART NUMBER	CABLE TYPE	CABLE
018834-0002	Differential Twinax	540-1153-000
018834-0003	Flexible Twinax	540-1161-000
018834-0004	Differential Twinax	540-1167-000

Insert Arrangements

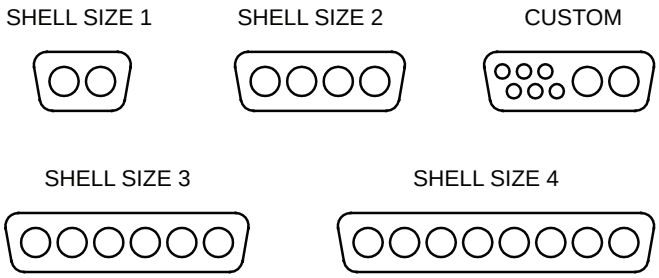

Shell Dimensions

SHELL SIZE	CONTACTS	A	B	C	D	E
1	2	.845	1.070	.600	#2-56	.572
2	4	1.285	1.510	1.040	#2-56	1.012
3	6	1.765	2.040	1.480	#4-40	1.452
4	8	2.205	2.480	1.920	#4-40	1.892

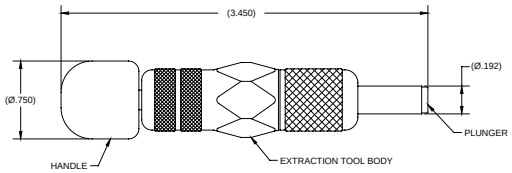

Removal Tool SIR-035

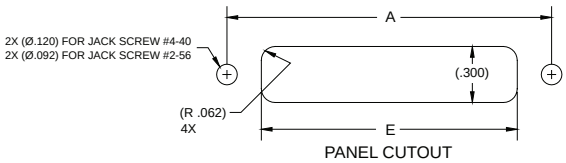

* Removable Twinax Contacts Require Removal Tool SIR-035 (ordered separately)

MDTX CABLE MOUNT PLUG

PART NUMBER	CONTACTS
014034-0012	2
014034-0014	4
014034-0016	6
014034-0018	8

*Cable Mount Twinax Contacts Sold Separately

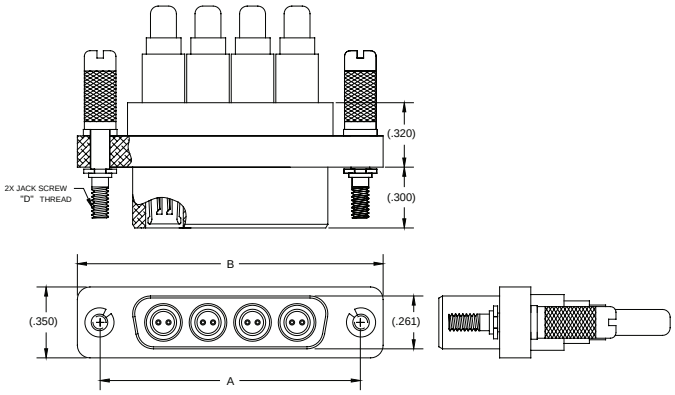

MDTX CABLE MOUNT RECEPTACLE

PART NUMBER	CONTACTS
014134-0012	2
014134-0014	4
014134-0016	6
014134-0018	8

*Cable Mount Twinax Contacts Sold Separately

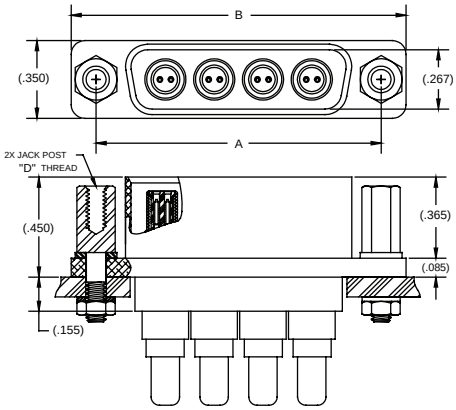

MDTX RECEPTACLE WITH STRAIGHT PC TAIL TWINAX PIN CONTACT

PART NUMBER	CONTACTS
014117-0012	2
014117-0014	4
014117-0016	6
014117-0018	8

*PC Tail Twinax Contacts included

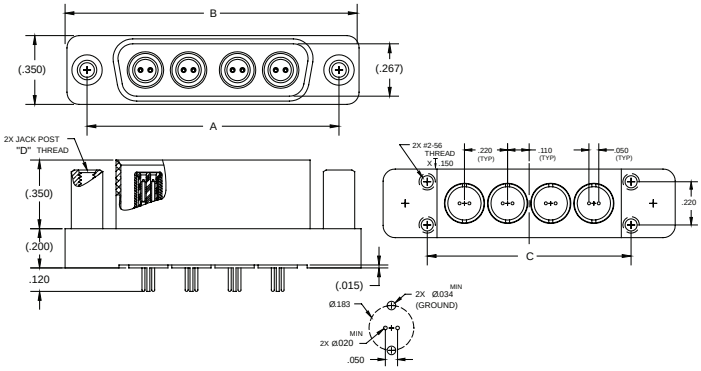

PCB Footprint

MDTX RECEPTACLE WITH R/A PC TAIL TWINAX PIN CONTACT

PART NUMBER	CONTACTS
014117-1112	2
014117-1114	4
014117-1116	6
014117-1118	8

*R/A PC Tail Twinax Contacts included

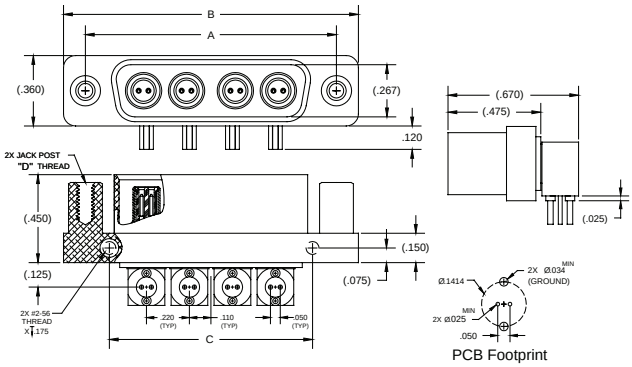

PCB Footprint

HOW TO ORDER

1 2 3 4

1 CONTACT #1

2 Cable Group

Flexible Twinax

3 = 540-1161-000

Differential Twinax

8 = 540-1153-000

3 4 = 540-1167-000

3 CONTACT #2

OL for Open Lead

4 Cable Length in Inches (XXX)

Cable Group	Cable Designation	Impedance (ohms)	Jacket	Conductor (Dia)
3	540-1161-000	100	0.130"	0.024"
8	540-1153-000	Differential: 100 Sig. to Shield: 50	0.085" x 0.130"	0.019" Stranded
34	540-1167-000	Differential: 100 Sig. to Shield: 50	0.117" x 0.160"	0.0233" Stranded

SMITHS CONNECTORS
GLOBAL SUPPORT

AMERICAS

info.us@smithsconnectors.com

Costa Mesa, CA
1.714.371.1100

Hudson, MA
1.978.568.0451

Kansas City, KS
1.913.342.5544

EUROPE

France
33.2.32969176
info.fr@smithsconnectors.com

Germany
49.991.250.120
info.de@smithsconnectors.com

Italy
39.010.60361
info.it@smithsconnectors.com

United Kingdom
44.208.236.2400
info.uk@smithsconnectors.com

ASIA

asiainfo@smithsconnectors.com

Shanghai, China
86.21.3318.4650

Suzhou, China
86.512.6273.1188

Singapore
65.6846.1655

visit us at | **smithsconnectors.com** |

Copyright© 2016 Smiths Connectors | All rights reserved | Version 1.1